THIS DOCUMENT AND THE DATA DISCLOSED HEREIN OR HEREWITH IS THE PROPERTY OF ALTIUM LIMITED AND MAY BE FREELY DISTRIBUTED IN WHOLE. NO RIGHTS ARE RESERVED OR EXPRESS OR IMPLIED WARANTEE GIVEN.

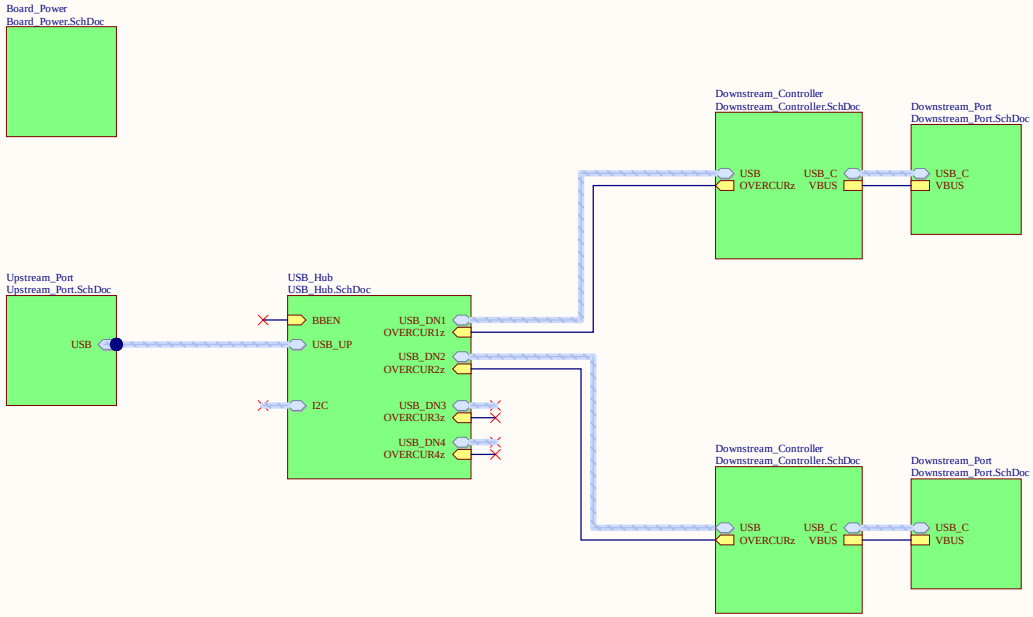

APPROVALS	DATE
ENG: *	
DSN: *	
CHK: *	
REFERENCE DOCUMENTS	
BOM: <BOM DOC NO>	
ASSY DWG: <ASSY DWG NO>	
FAB DWG: <FAB DWG NO>	
PCB DWG: <PCB DWG NO>	

PROJECT: Altium

PROJECT REVISION: 3af645cc | DOCUMENT REVISION: 07c4c24b | DESIGN ITEM:

TITLE: USBC Hub

SIZE	CAGE CODE	DWG NO.	REV
B	?????	<SCH DWG NO>	

SCALE: | FILE NAME: Top.SchDoc | SHEET 1 OF 6

<SCH DWG NO> DWG. NO. | 1 REV | 1 SHT.

REVISION	DESCRIPTION	DATE	APPROVED

THIS DOCUMENT AND THE DATA DISCLOSED HEREIN OR HEREWITH IS THE PROPERTY OF ALTIUM LIMITED AND MAY BE FREELY DISTRIBUTED IN WHOLE. NO RIGHTS ARE RESERVED OR EXPRESS OR IMPLIED WARANTEE GIVEN.

REVISION	DESCRIPTION	DATE	APPROVED

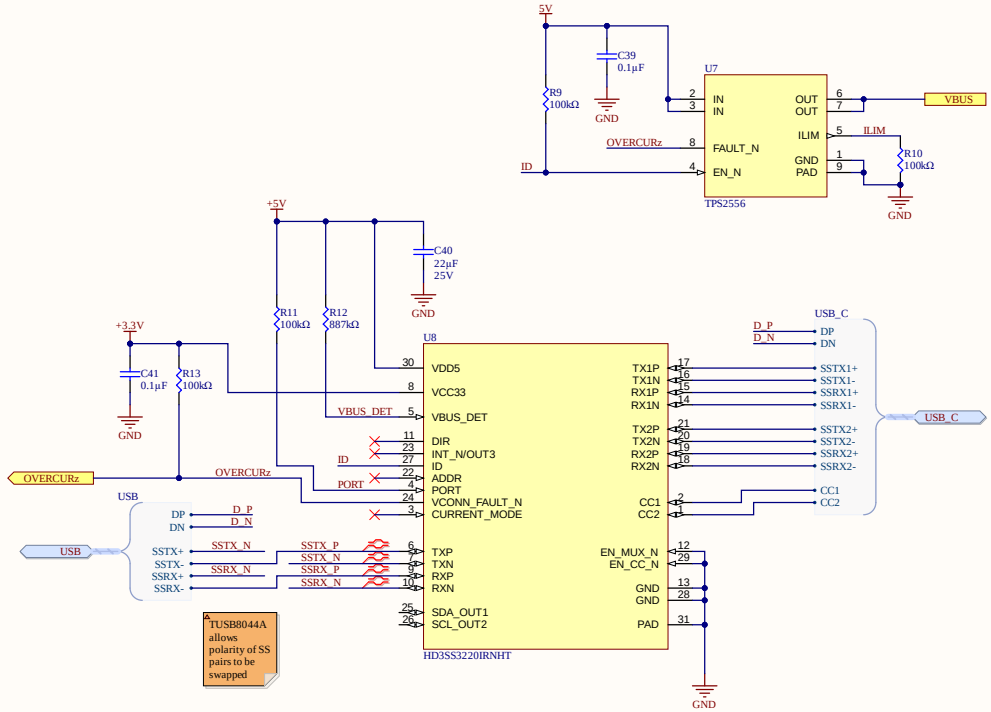

APPROVALS	DATE
ENG:	
DSN:	
CHK:	

REFERENCE DOCUMENTS

BOM:	<BOM DOC NO>
ASSY DWG:	<ASSY DWG NO>
FAB DWG:	<FAB DWG NO>
PCB DWG:	<PCB DWG NO>

PROJECT: Altium

PROJECT REVISION: 3af645cc | DOCUMENT REVISION: 07c4c24b | DESIGN ITEM:

TITLE: Downstream Controller

SIZE	CAGE CODE	DWG NO.	REV
B	?????	<SCH DWG NO>	

SCALE: | FILE NAME: Downstream_Controller.SchDoc | SHEET 2 OF 6

THIS DOCUMENT AND THE DATA DISCLOSED HEREIN OR HEREWITH IS THE PROPERTY OF ALTIUM LIMITED AND MAY BE FREELY DISTRIBUTED IN WHOLE. NO RIGHTS ARE RESERVED OR EXPRESS OR IMPLIED WARANTEE GIVEN.

REVISION	DESCRIPTION	DATE	APPROVED

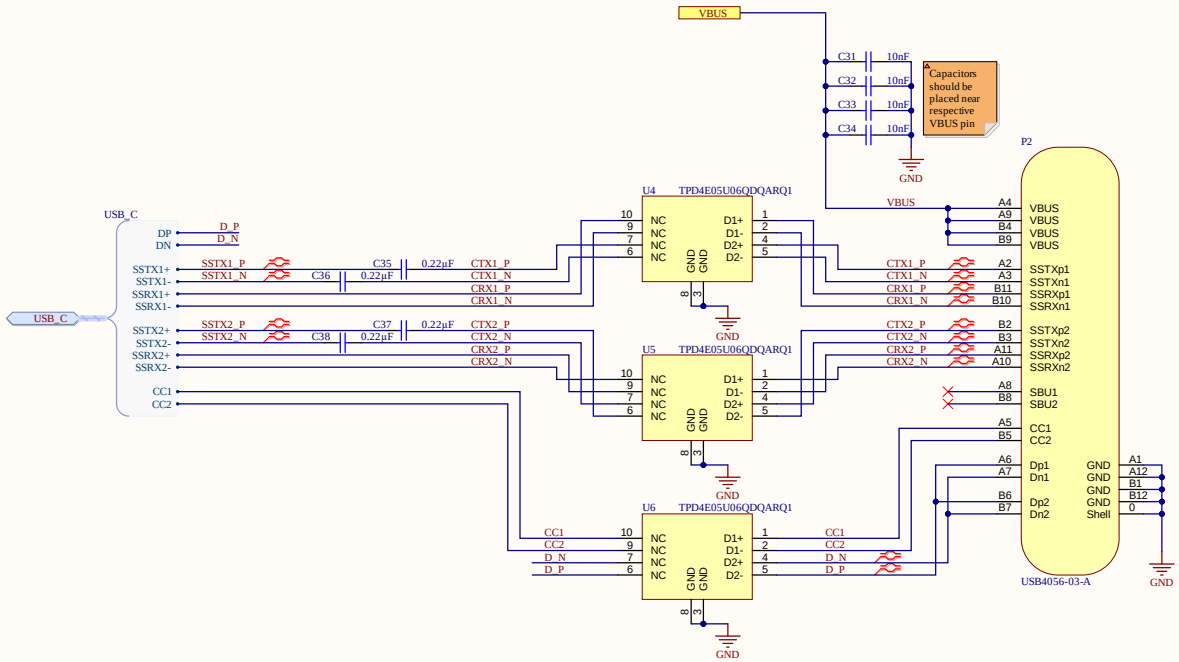

APPROVALS	DATE
ENG: *	
DSN: *	
CHK: *	

REFERENCE DOCUMENTS

BOM:	<BOM DOC NO>
ASSY DWG:	<ASSY DWG NO>
FAB DWG:	<FAB DWG NO>
PCB DWG:	<PCB DWG NO>

PROJECT: *

PROJECT REVISION: 3af645cc | DOCUMENT REVISION: 07c4c24b | DESIGN ITEM:

TITLE: Downstream Port

SIZE	CAGE CODE	DWG NO.	REV
B	?????	<SCH DWG NO>	

SCALE: | FILE NAME: Downstream_Port.SchDoc | SHEET 3 OF 6

<SCH DWG NO> 3

THIS DOCUMENT AND THE DATA DISCLOSED HEREIN OR HEREWITH IS THE PROPERTY OF ALTIUM LIMITED AND MAY BE FREELY DISTRIBUTED IN WHOLE. NO RIGHTS ARE RESERVED OR EXPRESS OR IMPLIED WARANTEE GIVEN.

REVISION	DESCRIPTION	DATE	APPROVED

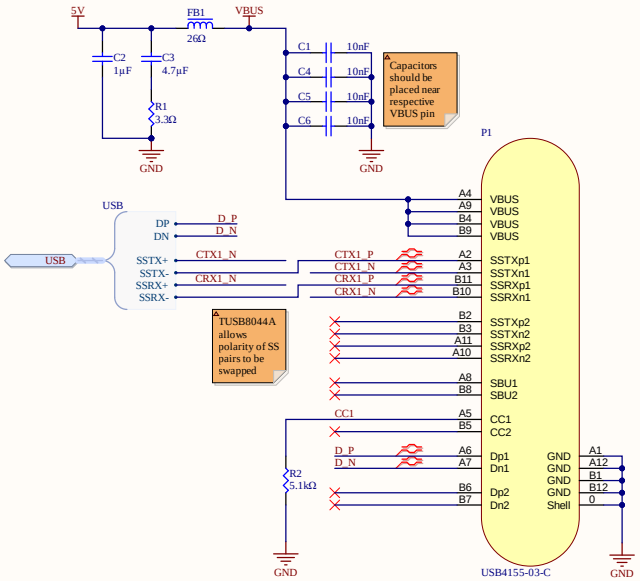

APPROVALS	DATE
ENG: *	
DSN: *	
CHK: *	

REFERENCE DOCUMENTS

BOM: <BOM DOC NO>

ASSY DWG: <ASSY DWG NO>

FAB DWG: <FAB DWG NO>

PCB DWG: <PCB DWG NO>

PROJECT

Altium

PROJECT REVISION: 3af645cc DOCUMENT REVISION: 07c4c24b DESIGN ITEM:

TITLE

Upstream Port

SIZE	CAGE CODE	DWG NO.	REV
B	?????	<SCH DWG NO>	

SCALE: FILE NAME Upstream_Port.SchDoc SHEET 4 OF 6

THIS DOCUMENT AND THE DATA DISCLOSED HEREIN OR HEREWITH IS THE PROPERTY OF ALTIUM LIMITED AND MAY BE FREELY DISTRIBUTED IN WHOLE. NO RIGHTS ARE RESERVED OR EXPRESS OR IMPLIED WARANTEE GIVEN.

REVISION	DESCRIPTION	DATE	APPROVED

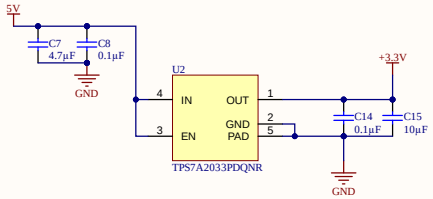

3.3V Buck

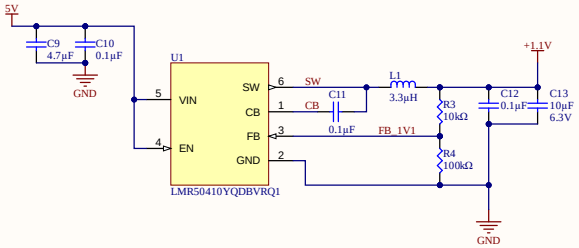

1.1V Buck

APPROVALS	DATE
ENG: *	
DSN: *	
CHK: *	

REFERENCE DOCUMENTS

BOM: <BOM DOC NO>

ASSY DWG: <ASSY DWG NO>

FAB DWG: <FAB DWG NO>

PCB DWG: <PCB DWG NO>

PROJECT: Altium

PROJECT REVISION: 3af645cc DOCUMENT REVISION: 07c4c24b DESIGN ITEM:

TITLE: Board Power

SIZE: B CAGE CODE: ????? DWG NO. <SCH DWG NO> REV

SCALE: FILE NAME: Board_Power.SchDoc SHEET 5 OF 6

PROJECT <SCH DWG NO> SHT 5

THIS DOCUMENT AND THE DATA DISCLOSED HEREIN OR HEREWITH IS THE PROPERTY OF ALTIUM LIMITED AND MAY BE FREELY DISTRIBUTED IN WHOLE. NO RIGHTS ARE RESERVED OR EXPRESS OR IMPLIED WARANTEE GIVEN.

REVISION	DESCRIPTION	DATE	APPROVED

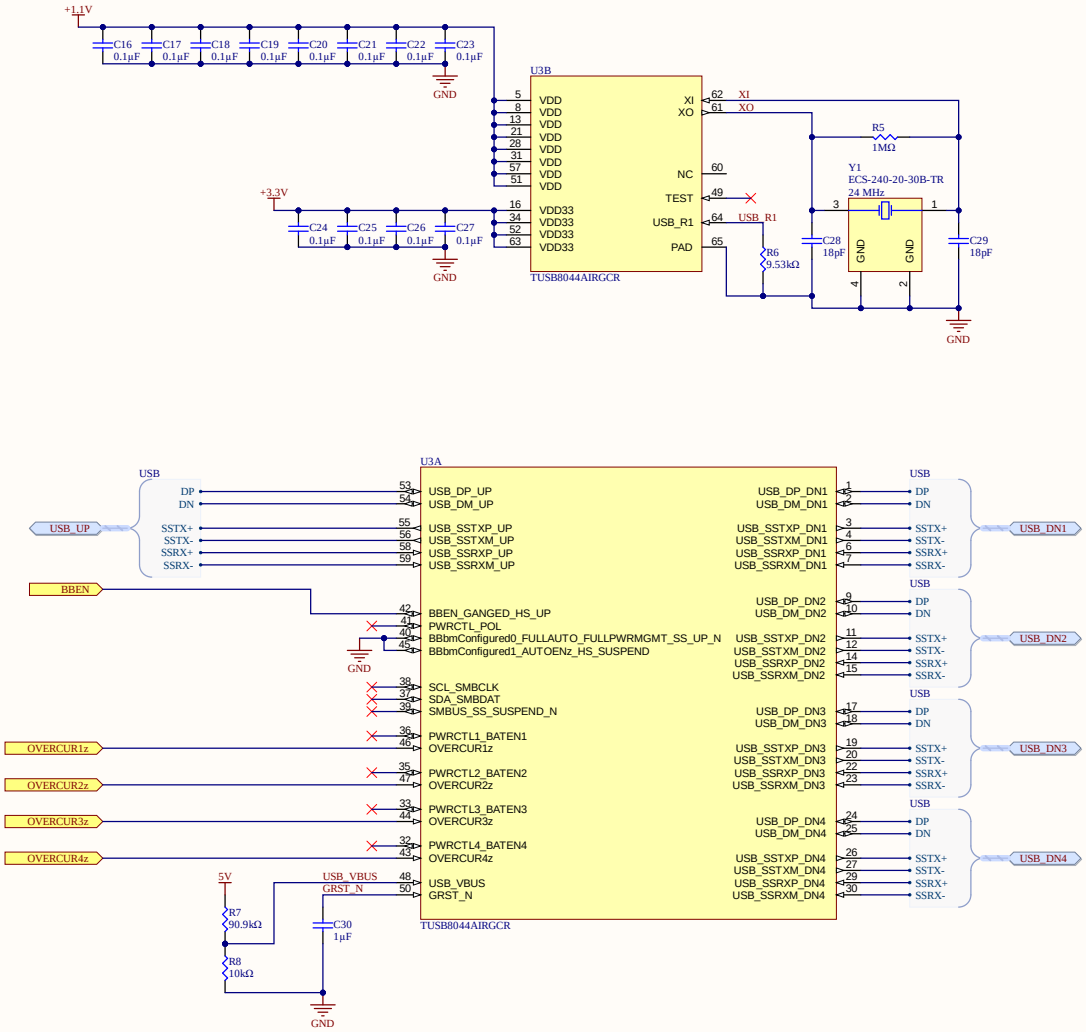

APPROVALS	DATE
ENG: *	
DSN: *	
CHK: *	

REFERENCE DOCUMENTS

BOM: <BOM DOC NO>
ASSY DWG: <ASSY DWG NO>
FAB DWG: <FAB DWG NO>
PCB DWG: <PCB DWG NO>

PROJECT: Altium
PROJECT REVISION: 3af645dc
DOCUMENT REVISION: 07c4c24b
DESIGN ITEM:

TITLE: USB Hub

SIZE: B
CAGE CODE: ?????
DWG NO.: <SCH DWG NO>
REV:
SCALE:
FILE NAME: USB_Hub.SchDoc
SHEET 6 OF 6